# Product data sheet

## HUMMEL connectoren

### Panel Connector

## Front Mount

with vibration protection

7.R41.008.000
https://www.ac-solutions.be/nl/product/7r41008000

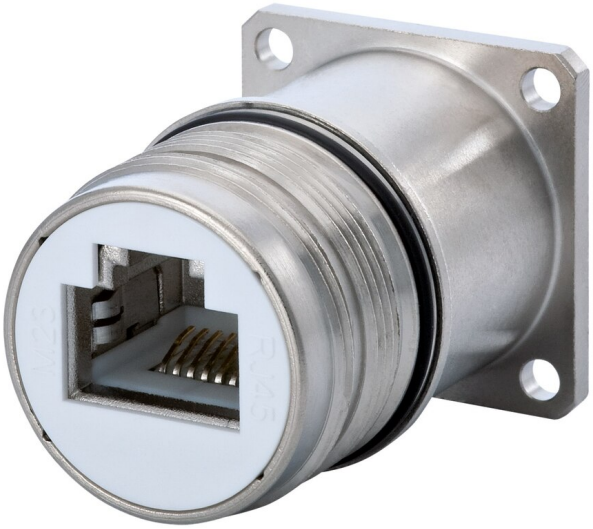

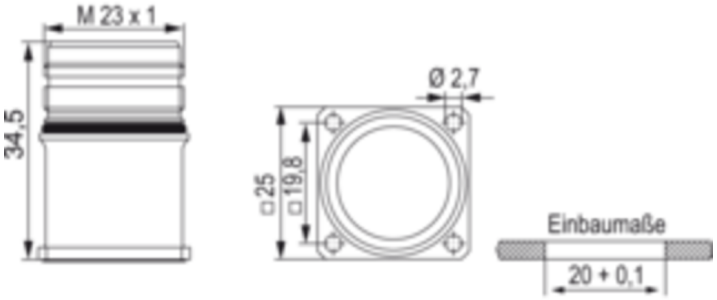


# Specificaties

## General Characteristics

| | |
|---|---|
| **Number of contacts** | 8 |
| **Gender of required insert** | Male |
| **Connector diameter** | 46 mm |
| **Connector locking system** | Screw |
| **Protection degree** | IP67 |
| **Terminal type** | Coupler |
| **Remark 1** | incl. 8 poles coupler, fully occupied |

## Electrical parameters

| | |
|---|---|
| **Nominal current** | upon request |
| **Nominal voltage** | upon request |

## Material

| | |
|---|---|
| **Housing material** | Brass Alloy, Die Cast |
| **Housing plating** | Nickel Plated |