Product data sheet

HUMMEL connectoren

Single Hole Panel Connector

Front Mount

7.R42.008.000
https://www.ac-solutions.be/nl/product/7r42008000



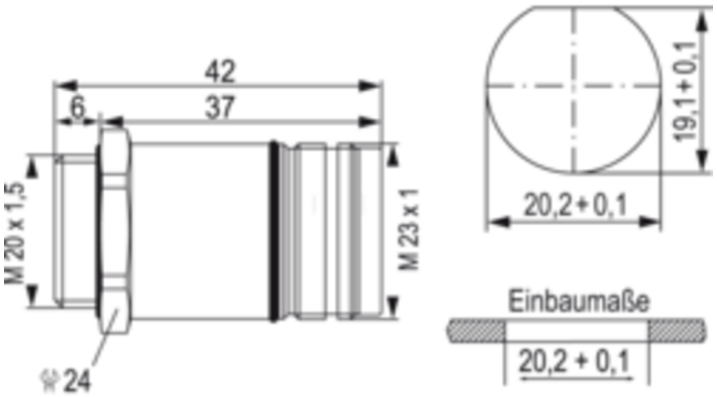

Specificaties

General Characteristics

Number of contacts	8
Gender of required insert	Male
Connector diameter	46 mm
Connector locking system	Screw
Protection degree	IP67
Terminal type	Coupler
Thread	M20 x 1,5
Remark 1	Incl. 8 poles coupler, fully occupied. Optional: Gasket M20 x 1,5 Locking Nut

Electrical parameters

Nominal current	upon request
Nominal voltage	upon request

Material

Housing material	Brass Alloy, Die Cast
Housing plating	Nickel Plated