Product data sheet

HUMMEL connectoren

Right Angle Panel Connector, Male Thread

300° rotating

locking screw at flange

7.R43.108.000
https://www.ac-solutions.be/nl/product/7r43108000

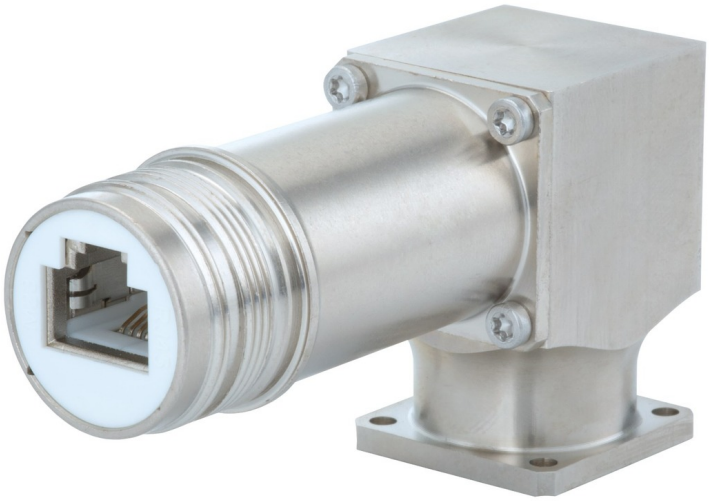

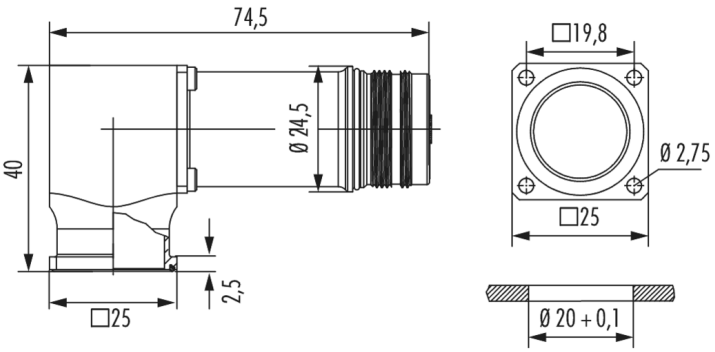

Specificaties

General Characteristics

Number of contacts	8
Gender of required insert	Male
Connector diameter	46 mm
Connector locking system	Screw
Protection degree	IP67
Terminal type	Coupler
Remark 1	Incl. 8 poles coupler fully occupied. Optional: Gasket

Electrical parameters

Nominal current	upon request
Nominal voltage	upon request

Material

Housing material	Brass Alloy, Die Cast
Housing plating	Nickel Plated