Product data sheet

HUMMEL connectoren

Panel Connector

Rear Mount

Dip solder insert

7.R45.008.000
https://www.ac-solutions.be/nl/product/7r45008000

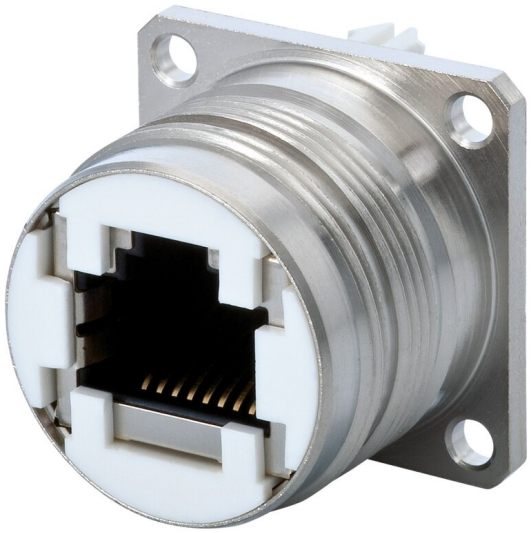

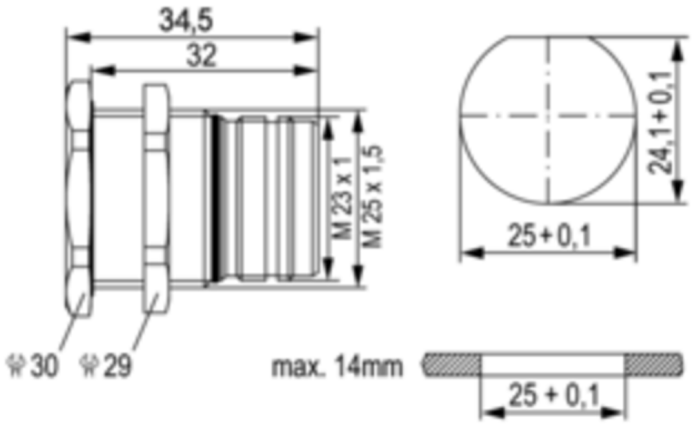

Specificaties

General Characteristics

Number of contacts	8
Gender of required insert	Male
Connector diameter	46 mm
Connector locking system	Screw
Protection degree	IP67
Terminal type	Dip-solder
Thread	4 x M3
Remark 1	With vibration protection, Incl. 8 poles dip solder insert

Electrical parameters

Nominal current	upon request
Nominal voltage	upon request

Material

Housing material	Brass Alloy, Die Cast

Product data sheet

HUMMEL connectoren

Panel Connector

Housing plating	Nickel Plated