Product data sheet

HUMMEL connectoren

Single Hole Panel Connector with strain relief

Rear Mount

Single hole

7.R52.408.000
https://www.ac-solutions.be/nl/product/7r52408000



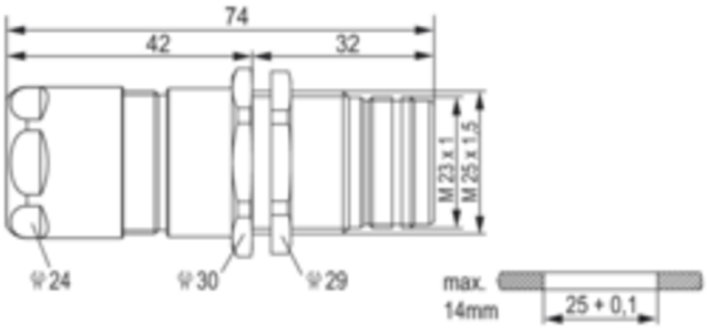

Specificaties

General Characteristics

Number of contacts	8
Gender of required insert	Male
Connector diameter	46 mm
Connector locking system	Screw
Protection degree	IP67
Terminal type	Coupler
Thread	M25 x 1,5
Remark 1	Incl. 8 poles coupler, fully occupied. Locking Nut included

Electrical parameters

Nominal current	upon request
Nominal voltage	upon request

Material

Housing material	Brass Alloy, Die Cast

Product data sheet

HUMMEL connectoren

Single Hole Panel Connector with strain relief

Housing plating	Nickel Plated