Product data sheet

Binder connectoren

Male angled panel mount connector

Front fastened, with shielding sheet

86 6319 1121 00005
https://www.ac-solutions.be/nl/product/866319112100005



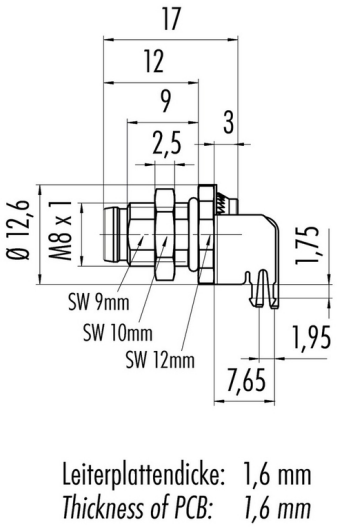

Specificaties

General Characteristics

Series	Sensor
Subseries	768-718
Gender	Male
Number of contacts	5
Contact terminal	Dip solder
Upper temperature	+85 °C
Lower temperature	-40 °C
Protection degree	IP67
Locking system	Screw, snap-in
Mating cycles	>100
Connector Diameter	12.6 mm

Electrical parameters

Nominal current	4 A
Nominal voltage	30 V

Product data sheet

Binder connectoren

Male angled panel mount connector

Impuls voltage	800 V
Max. contact resistance	3 m?
Pollution degree	3
Overvoltage categorie	II

Material

Material group	II
Material of insert	PA (UL 94 HB)
Material of housing	Zinc diecasting nickel plated, PA
Material of contact	CuZn (Brass)
Plating	Au (Gold)