# Product data sheet

## Binder connectoren

### Female angled connector

99 0496 75 24
https://www.ac-solutions.be/nl/product/9904967524

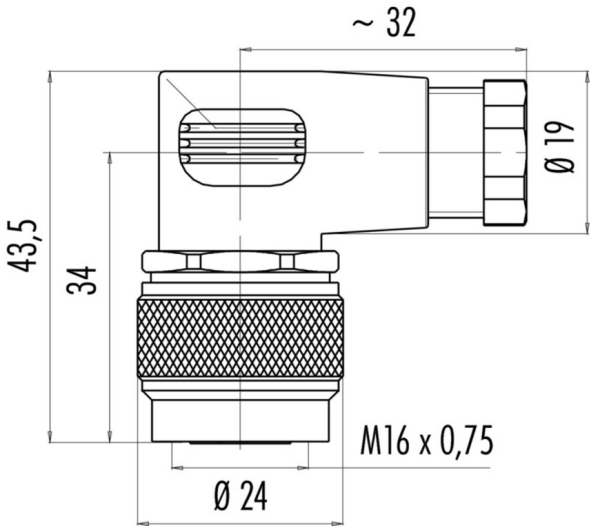


# Specificaties

## General Characteristics

| | |
|---|---|
| **Screw size** | M16 |
| **Series** | Miniature |
| **Subseries** | 723 |
| **Gender** | Female |
| **Number of contacts** | 24 |
| **Contact terminal** | Solder |
| **Upper temperature** | +95 °C |
| **Lower temperature** | -40 °C |
| **Protection degree** | IP67 |
| **Locking system** | Screw (M16) |
| **Connector Diameter** | 24 mm |
| **Cable outlet** | 6-8 mm |
| **Wire-section** | 0.14 mm² |
| **Remark*** | *In case of pollution degree 2, overvoltage category II rated voltage is reduced to 32 V. |

## Electrical parameters

| | |
|---|---|
| **Nominal current** | 1 A |
| **Nominal voltage** | 60 (32) V |

# Product data sheet

## Binder connectoren

### Female angled connector

| | |
|---|---|
| **Impuls voltage** | 500 V |
| **Max. contact resistance** | 3 m? |
| **Pollution degree** | 1 (2)* |
| **Overvoltage categorie** | I (II)* |

## Material

| | |
|---|---|
| **Material group** | III |
| **Material of insert** | PBT (UL 94 V-0) |
| **Material of housing** | PA (UL 94 HB) |
| **Material of contact** | CuSn (Bronze) |
| **Plating** | Au (Gold) |