Product data sheet

Binder connectoren

Female cable connector

UL-approval

99 2444 21 05
https://www.ac-solutions.be/nl/product/9924442105

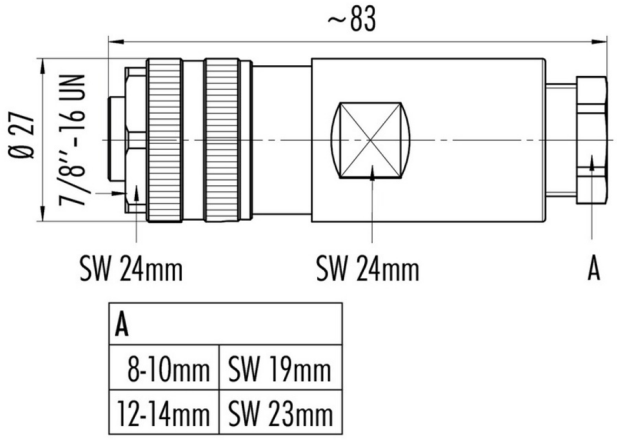

Specificaties

General Characteristics

Screw size	7/8
Series	Sensor
Subseries	820
Gender	Female
Number of contacts	5
Contact terminal	Screw
Upper temperature	+85 °C
Lower temperature	-25 °C
Protection degree	IP67
Locking system	Screw (7/8"-16 UN)
Mating cycles	>50
Connector Diameter	27 mm
Cable outlet	8-10 mm
Wire-section	1.5 mm²

Electrical parameters

Product data sheet

Binder connectoren

Female cable connector

Nominal current	9 A
Nominal voltage	300 (UL 600) V
Impuls voltage	4000 V
Max. contact resistance	3 m?
Pollution degree	3
Overvoltage categorie	III

Material

Material group	III
Material of insert	PUR/PA (UL 94 HB)
Material of housing	PBT (UL 94 V-0)
Material of contact	CuZn (Brass)
Plating	Au (Gold)