Product data sheet

Binder connectoren

Female panel mount connector

Front fastened

99 4604 00 09
https://www.ac-solutions.be/nl/product/9946040009

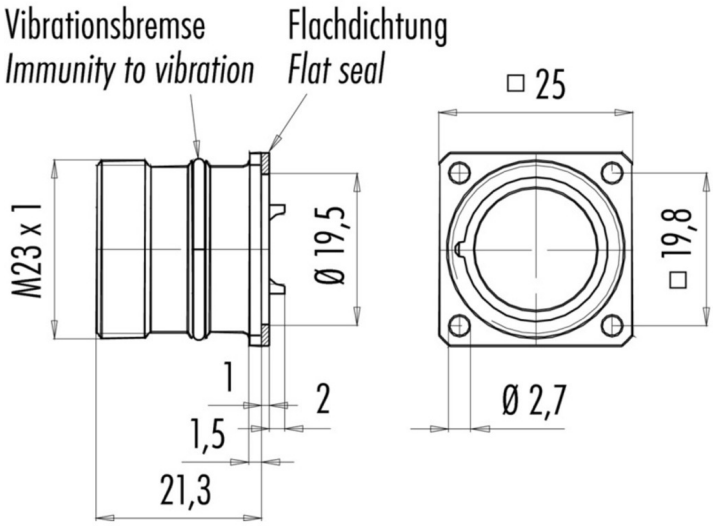

Specificaties

General Characteristics

Screw size	M23
Series	Power
Subseries	623
Gender	Female
Number of contacts	9
Contact terminal	Solder
Upper temperature	+125 °C
Lower temperature	-20 °C
Protection degree	IP67
Locking system	Screw (M23)
Mating cycles	>50
Connector Diameter	25 mm
Contact Type	Clockwise
Wire-section	8 x 1,5 / 1 x 2,5 mm²

Electrical parameters

Product data sheet

Binder connectoren

Female panel mount connector

Nominal current	8 x 8 / 1 x 20 A
Nominal voltage	300 V
Impuls voltage	2500 V
Max. contact resistance	3 m?
Pollution degree	3
Overvoltage categorie	II

Material

Material group	III
Material of insert	PBT/PA66
Material of housing	Zinc die cast nickel plated
Material of contact	CuZn (Brass)
Plating	Au (Gold)