Product data sheet

HUMMEL connectoren

Panel Connector male thread, front mounting

K,L Coding

With flange 20x20mm, 4x2,7mm

A712-7.K40.000.000
https://www.ac-solutions.be/nl/product/a7127k40000000

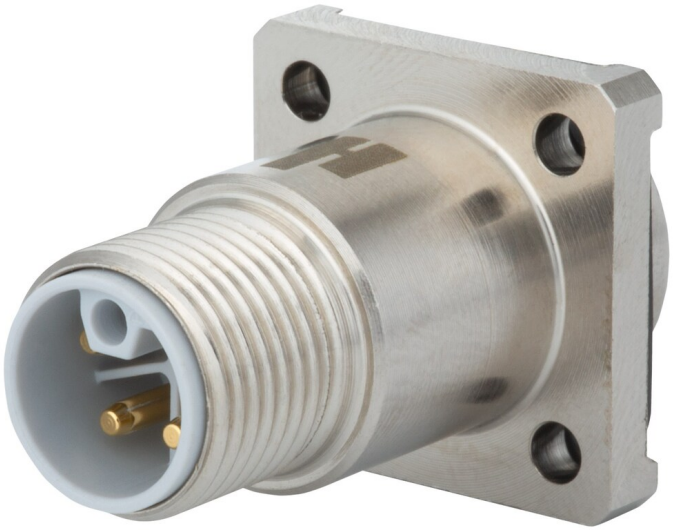

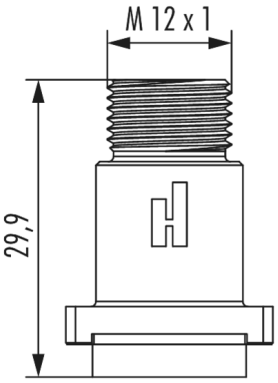

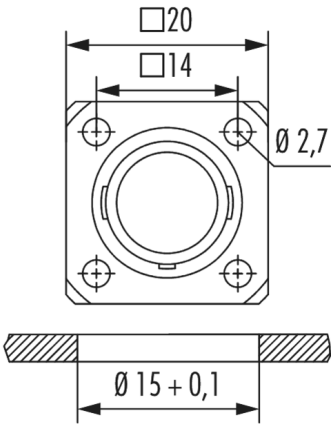

Specificaties

General Characteristics

Size	M12 Power
Gender of required insert	Male
Upper temperature	125 °C
Lower temperature	-40 °C
Connector locking system	Screw
Protection degree	IP67/IP69K
Mating cycles	>100
Size flange	20x20 mm

Material

Housing material	Brass/Die Cast
Housing plating	Nickel plated