Product data sheet

HUMMEL connectoren

Panel connector female thread, single hole front mounted, orientable

K,L Coding

A712-7.K44.200.000
https://www.ac-solutions.be/nl/product/a7127k44200000



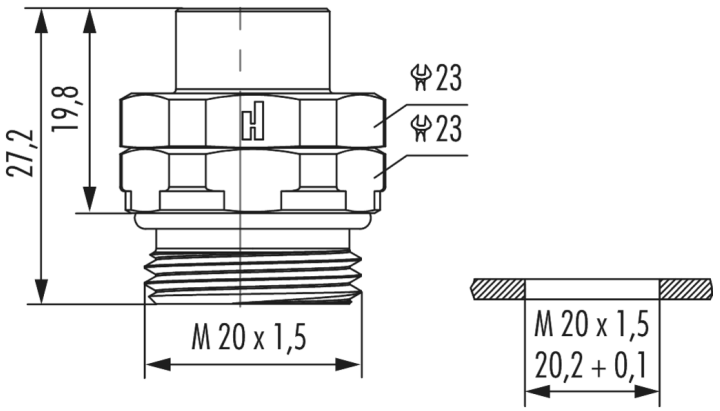

Specificaties

General Characteristics

Size	M12 Power
Gender of required insert	Female
Upper temperature	+125 °C
Lower temperature	-40 °C
Connector locking system	Screw
Protection degree	IP67/IP69K
Mating cycles	>100
Thread	M16

Material

Housing material	Brass/Die Cast
Housing plating	Nickel plated