Product data sheet

HUMMEL connectoren

Straight Connector, Male Thread

S,T Coding

A712-7.S20.400.000
https://www.ac-solutions.be/nl/product/a7127s20400000



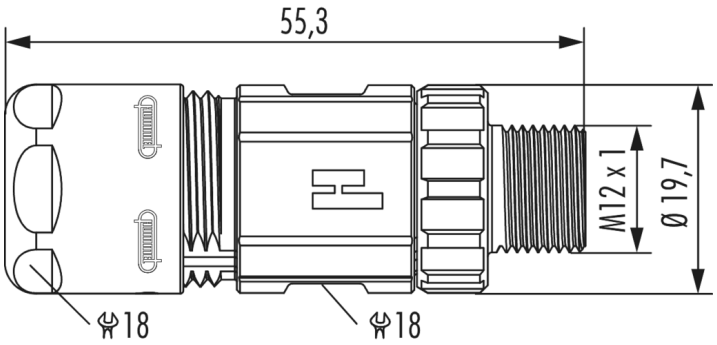

Specificaties

General Characteristics

Size	M12 Power
Gender of required insert	Male
Connector diameter	19.7 mm
Upper temperature	85 °C
Lower temperature	-40 °C
Connector locking system	Screw
Protection degree	IP67/IP69K
Mating cycles	>100
Cable diameter	5-9 mm

Material

Housing material	Brass/Die Cast
Housing plating	Nickel plated