Product data sheet

Ilme connectoren

male contact, 70mm², silver, turned crimp, 300A, series C30

C30MA 70 P
https://www.ac-solutions.be/nl/product/c30ma70p

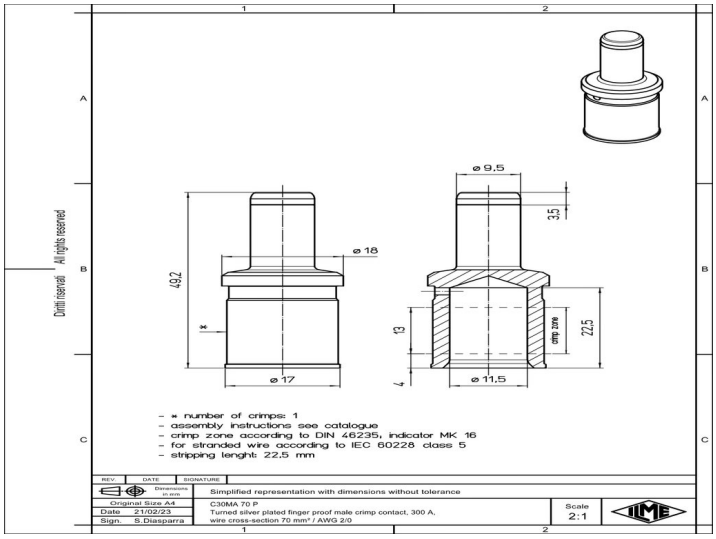

Specificaties

General characteristics

Connection type	Turned crimp
Contact type (gender)	Male
Min. Cross section	70 mm²
Max. Cross section	70 mm²
AWG size	2/0
Diameter male contact	9.5 mm
Wire strip length	22.5 mm

Electrical parameters

Max. rated current	300 A

Material

Material contact	Copper alloy
Plating of contact	Silver