Product data sheet

ILME connectoren

mounting frame, size 104.27, IP67 alu, for bulkhead mounting housing C7I 24

for V-Type enclosures

C7 24 FL
https://www.ac-solutions.be/nl/product/c724fl



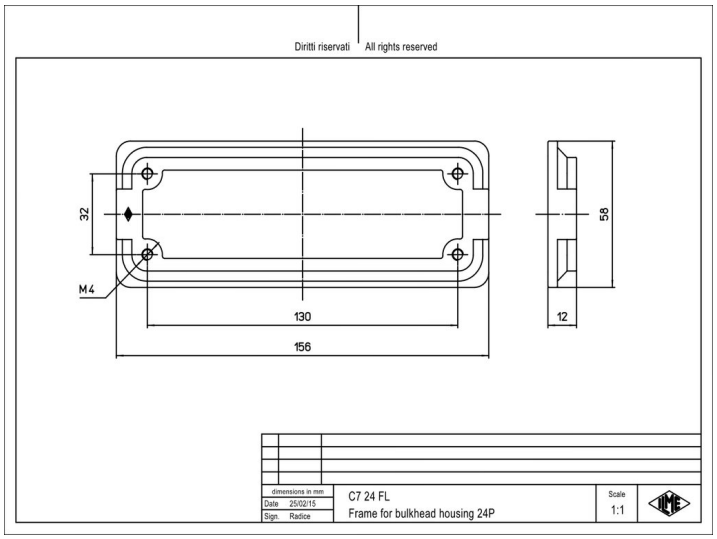

Specificaties

General characteristics

Accessory type	Counterflange
Size	104.27
Operation lower temperature	-40 °C
Operation upper temperature	125 °C