Product data sheet

Ilme connectoren

male contact, 0,5mm², gold 2µm, crimp, 10A, series CD

CDM2D 0.5
https://www.ac-solutions.be/nl/product/cdm2d05

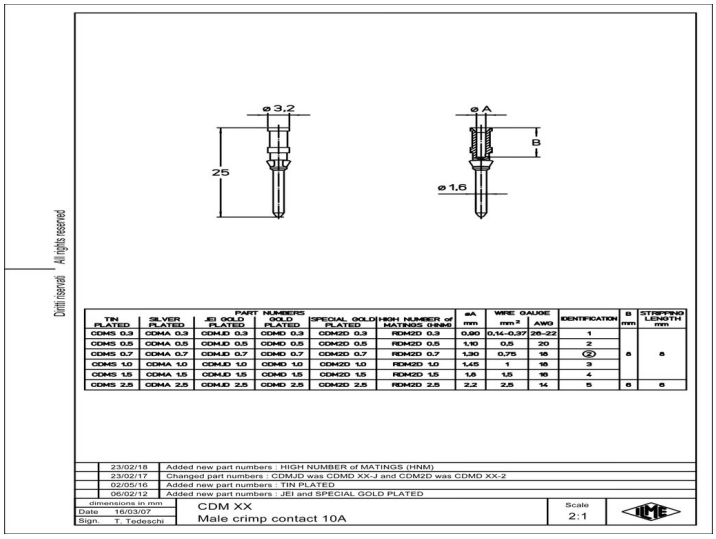

Specificaties

General characteristics

Connection type	Turned crimp
Contact type (gender)	Male
Min. Cross section	0.5 mm²
Max. Cross section	0.5 mm²
AWG size	20
Identification	2
Diameter male contact	1.6 mm
Wire strip length	8 mm

Electrical parameters

Max. rated current	10 A

Material

Material contact	Copper alloy
Plating of contact	Gold