Product data sheet

ILME connectoren

hood, high, size 44.27, C-TYPE alu, 2 pegs, 1xPG21 side, no adap.

CFO 06 L21
https://www.ac-solutions.be/nl/product/cfo06l21



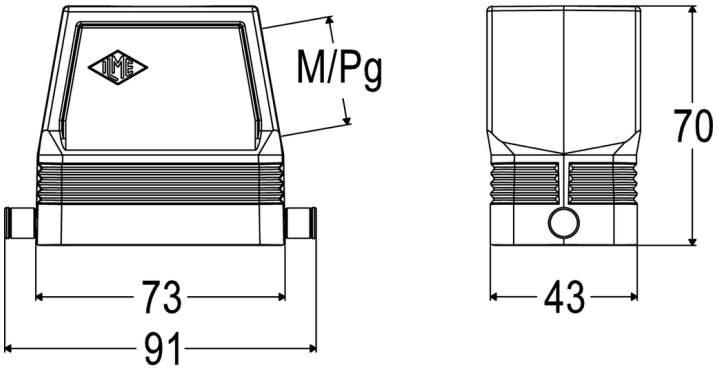

Specificaties

General characteristics

Enclosure type	Hood
Size	44.27
Enclosure series	C-TYPE
Closing type	With 2 pegs
Locking mechanism	Single locking lever
Protection degree	IP65 / IP66 / IP69
Ambient lower temperature	-40 °C
Ambient upper temperature	125 °C
Operation lower temperature	-40 °C
Operation upper temperature	125 °C
Cable entry type	side cable entry
Cable entry size	Pg21
Position cable feed	Side entry
Height	72 mm
Width	43 mm
Length	60 mm
Remark	Enclosure without adaptor, threaded on the body, to be used only with a complete cable gland

Product data sheet

ILME connectoren

hood, high, size 44.27, C-TYPE alu, 2 pegs, 1xPG21 side, no adap.

Material

Material housing	Die cast aluminium alloy
Coating housing	With epoxy-polyester thermosetting powder coating
Inflammability class of insulation material acc. with UL94	V2
Extra information	Corrosion resistant,UV resistant,With interlocking device