# Product data sheet

## ILME connectoren

### protection cover, size 44.27, LS-type alu, 2 pegs, eyelet

CHCN 06 L
https://www.ac-solutions.be/nl/product/chcn06l



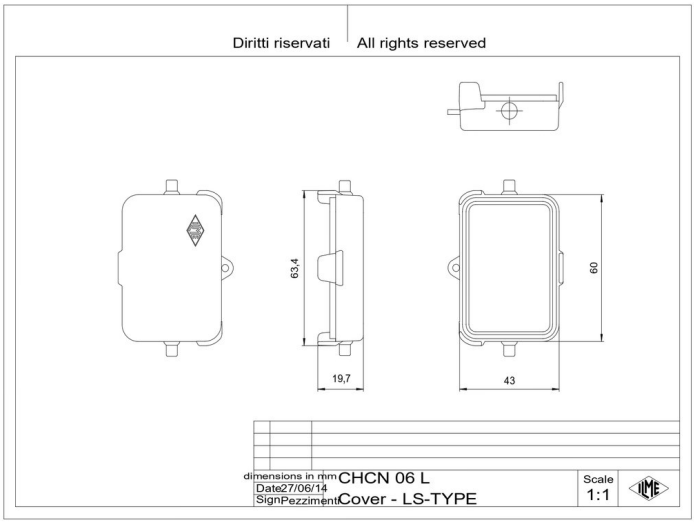


## Specificaties

### General characteristics

| | |
|---|---|
| **Accessory type** | Cover |
| **Size** | 44.27 |
| **Operation lower temperature** | -40 °C |
| **Operation upper temperature** | 125 °C |
| **Colour** | Black |
| **Protection degree** | IP65 |
| **Closing type** | With 2 pegs |
| **Extra information** | With interlocking |
| **Remark** | With eyelet |