Product data sheet

ILME connectoren

protection cover, size 77.27, LS-type alu, 2 levers, gasket, loop

CHCN 16 G
https://www.ac-solutions.be/nl/product/chcn16g



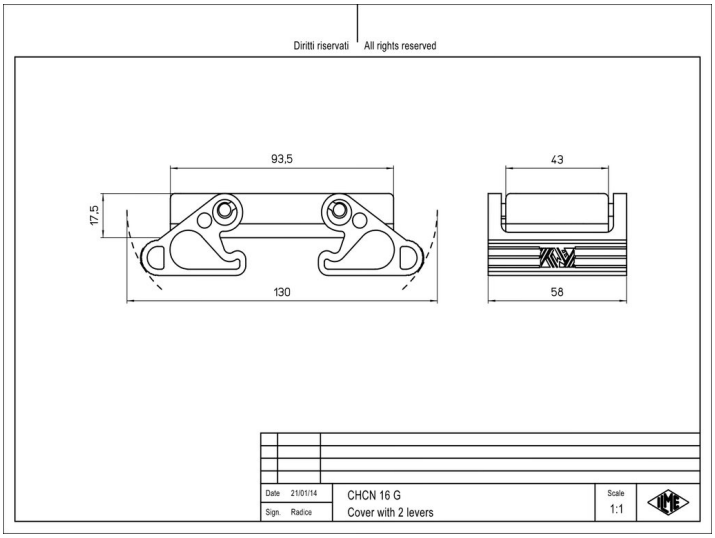

Specificaties

General characteristics

Accessory type	Cover
Size	77.27
Operation lower temperature	-40 °C
Operation upper temperature	125 °C
Colour	Black
Protection degree	IP65
Closing type	With 2 levers
Extra information	With interlocking,With sealing
Remark	With loop