Product data sheet

ILME connectoren

bulkhead mounting housing, size 104.27, LS-type alu, 2 levers

CHIN 24
https://www.ac-solutions.be/nl/product/chin24



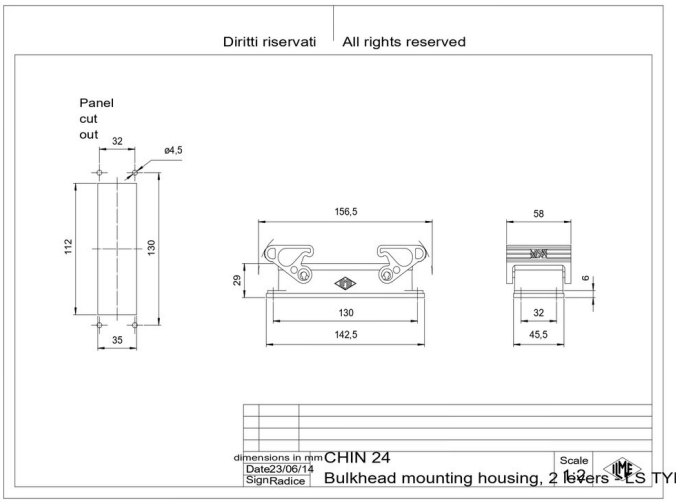

Specificaties

General characteristics

Enclosure type	Bulkhead mounting housing
Size	104.27
Enclosure series	LS-TYPE
Closing type	With 2 levers
Locking mechanism	Double locking levers
Protection degree	IP65
Ambient lower temperature	-40 °C
Ambient upper temperature	125 °C
Operation lower temperature	-40 °C
Operation upper temperature	125 °C
Cable entry type	without cable entry
Position cable feed	Without cable entry
Height	29 mm
Width	58 mm
Length	142.5 mm

Material

Material housing	Die cast aluminium alloy

Product data sheet

ILME connectoren

bulkhead mounting housing, size 104.27, LS-type alu, 2 levers

Coating housing	With powder coating
Inflammability class of insulation material acc. with UL94	V2
Extra information	Corrosion resistant,UV resistant,With interlocking device