Product data sheet

ILME connectoren

surface mounting housing, size 77.27, C-TYPE alu, 4 pegs, 2xPG21 side, cov.

CHP 16 CS2
https://www.ac-solutions.be/nl/product/chp16cs2

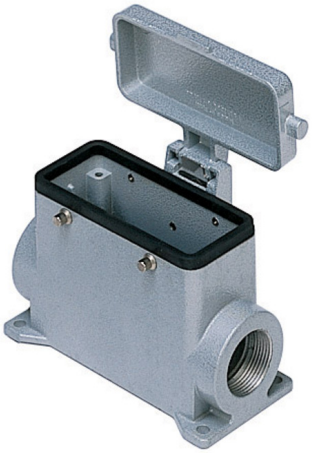

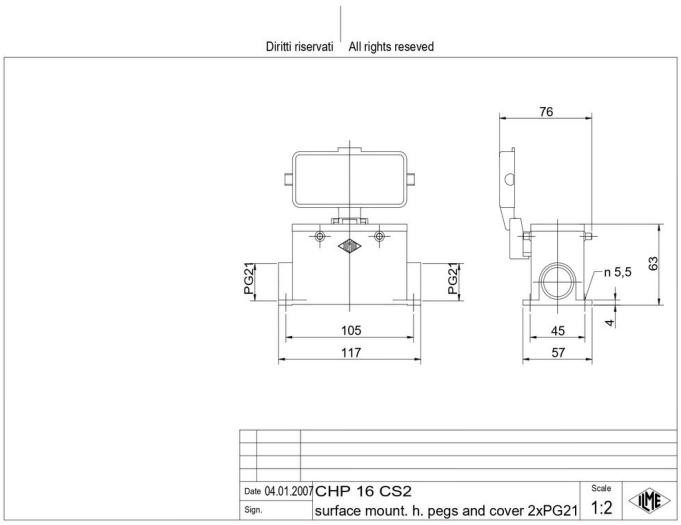

Specificaties

General characteristics

Enclosure type	Surface mounting housing
Size	77.27
Enclosure series	C-TYPE
Closing type	With 4 pegs
Locking mechanism	Double locking levers
Protection degree	IP65
Ambient lower temperature	-40 °C
Ambient upper temperature	125 °C
Operation lower temperature	-40 °C
Operation upper temperature	125 °C
Cable entry type	side cable entry
Cable entry size	Pg21 x 2
Position cable feed	Two-sided
Height	63 mm
Width	57 mm
Length	117 mm
Remark	May be combined with enclosures: CHO 16 X,CAO 16 X,CHV 16 X,CAV 16 X,MHO 16 X,MAO 16 X,MHV 16 X,MAV 16 X

Product data sheet

ILME connectoren

surface mounting housing, size 77.27, C-TYPE alu, 4 pegs, 2xPG21 side, cov.

Material

Material housing	Die cast aluminium alloy
Coating housing	With epoxy-polyester thermosetting powder coating
Inflammability class of insulation material acc. with UL94	V2
Extra information	Corrosion resistant,UV resistant,With hinged lid,With interlocking device