Product data sheet

ILME connectoren

bulkhead mounting housing, size 44.27, V-TYPE alu, 1 lever, spring cover

CVI 06 LSP
https://www.ac-solutions.be/nl/product/cvi06lsp



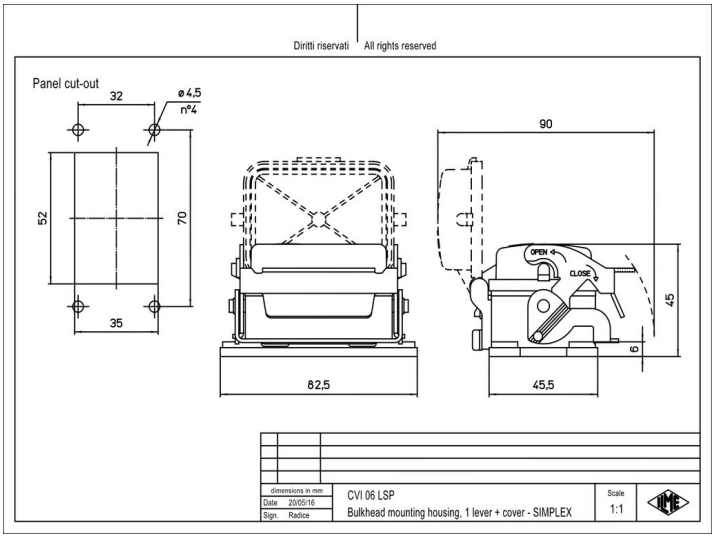

Specificaties

General characteristics

Enclosure type	Bulkhead mounting housing
Size	44.27
Enclosure series	V-TYPE
Closing type	With 1 lever
Locking mechanism	Single locking lever
Protection degree	IP65
Ambient lower temperature	-40 °C
Ambient upper temperature	125 °C
Operation lower temperature	-40 °C
Operation upper temperature	125 °C
Cable entry type	without cable entry
Position cable feed	Without cable entry
Height	45 mm
Width	45.5 mm
Length	82.5 mm

Material

Material housing	Die cast aluminium alloy

Product data sheet

ILME connectoren

bulkhead mounting housing, size 44.27, V-TYPE alu, 1 lever, spring cover

Coating housing	With epoxy-polyester thermosetting powder coating
Inflammability class of insulation material acc. with UL94	V2
Extra information	Corrosion resistant,UV resistant,With hinged lid,With interlocking device