Product data sheet

ILME connectoren

hood, high, size 77.27, LS-type alu, 2 levers, 1xM32 top, no adaptor

MFVN 16 G32
https://www.ac-solutions.be/nl/product/mfvn16g32



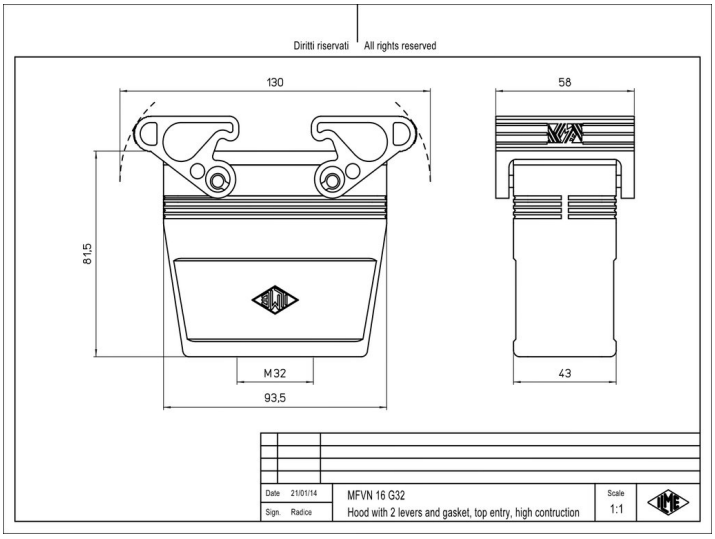

Specificaties

General characteristics

Enclosure type	Hood
Size	77.27
Enclosure series	LS-TYPE
Closing type	With 2 levers
Locking mechanism	Double locking levers
Protection degree	IP65
Ambient lower temperature	-40 °C
Ambient upper temperature	125 °C
Operation lower temperature	-40 °C
Operation upper temperature	125 °C
Cable entry type	top cable entry
Cable entry size	M32
Position cable feed	Top entry
Height	81.5 mm
Width	58 mm
Length	130 mm

Material

Product data sheet

ILME connectoren

hood, high, size 77.27, LS-type alu, 2 levers, 1xM32 top, no adaptor

Material housing	Die cast aluminium alloy
Coating housing	With powder coating
Inflammability class of insulation material acc. with UL94	V2
Extra information	Corrosion resistant,UV resistant,With interlocking device