Product data sheet

ILME connectoren

hood, size 77.62, C-TYPE alu, 4 pegs, 1xM50 side

MHO 32.50
https://www.ac-solutions.be/nl/product/mho3250

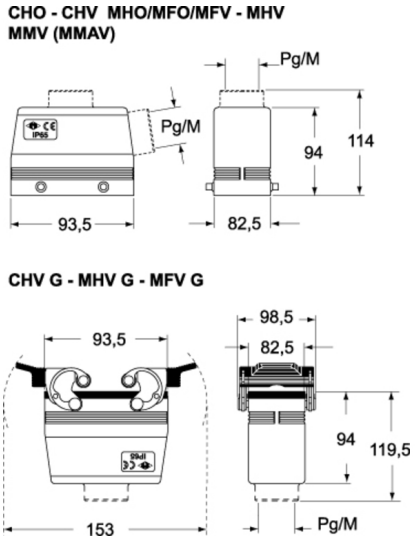

Specificaties

General characteristics

Enclosure type	Hood
Size	77.62
Enclosure series	C-TYPE
Closing type	With 4 pegs
Locking mechanism	Double locking levers
Protection degree	IP65 / IP66 / IP69
Ambient lower temperature	-40 °C
Ambient upper temperature	125 °C
Operation lower temperature	-40 °C
Operation upper temperature	125 °C
Cable entry type	side cable entry with adapter
Cable entry size	M50
Position cable feed	Side entry
Height	94 mm
Width	82.5 mm
Length	93.5 mm

Material

Product data sheet

ILME connectoren

hood, size 77.62, C-TYPE alu, 4 pegs, 1xM50 side

Material housing	Die cast aluminium alloy
Coating housing	With epoxy-polyester thermosetting powder coating
Inflammability class of insulation material acc. with UL94	V2
Extra information	Corrosion resistant,UV resistant,With interlocking device