Product data sheet

Ilme connectoren

surface mounting housing, size 44.27, IL-BRID stainless steel, 1 lever, 1xM40 side

MLAP 06 LS40
https://www.ac-solutions.be/nl/product/mlap06ls40

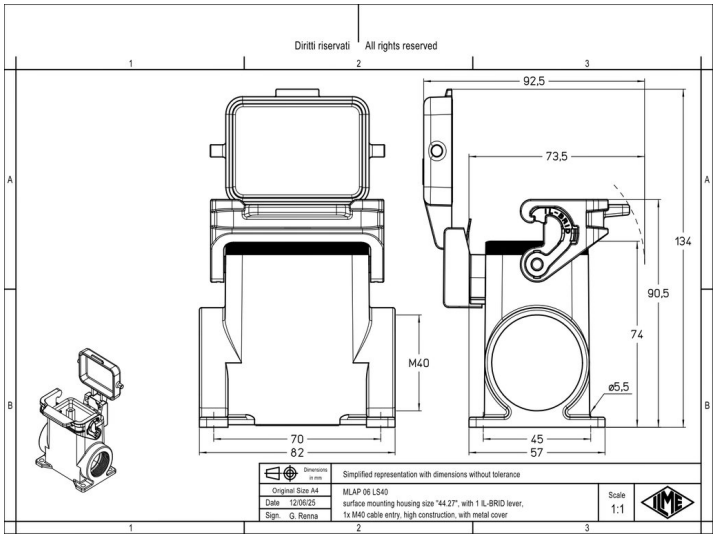

Specificaties

General characteristics

Enclosure type	Surface mounting housing
Size	44.27
Enclosure series	IL-BRID
Closing type	With 1 lever
Locking mechanism	Single locking lever
Protection degree	IP65
Ambient lower temperature	-40 °C
Ambient upper temperature	125 °C
Operation lower temperature	-40 °C
Operation upper temperature	125 °C
Cable entry type	side cable entry
Cable entry size	M40
Position cable feed	Side entry
Height	90.5 mm
Width	57 mm
Length	82 mm

Material

Product data sheet

Ilme connectoren

surface mounting housing, size 44.27, IL-BRID stainless steel, 1 lever, 1xM40 side

Material housing	Stainless steel