Product data sheet

Ilme connectoren

male contact, 0,14-0,37mm², gold HNM, crimp, 10A, series CD

RDM2D 0.3
https://www.ac-solutions.be/nl/product/rdm2d03

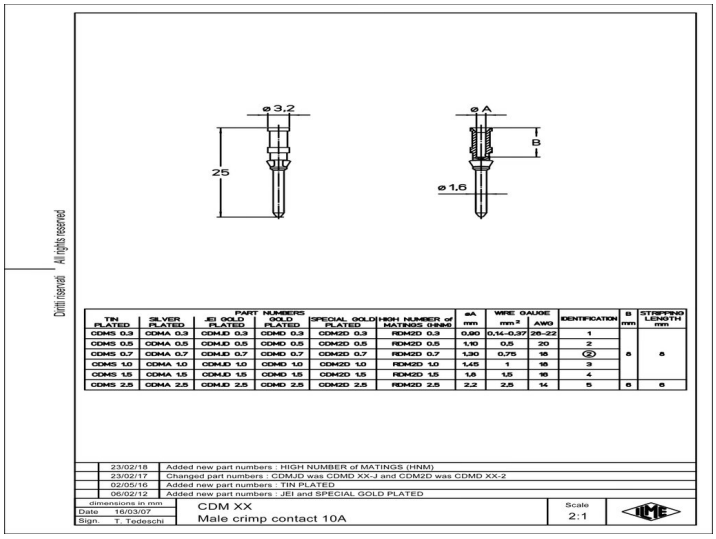

PART NUMBERS						ø A	WIRE GAUGE		IDENTIFICATION	B	STRIPPING LENGTH
TIN PLATED	SILVER PLATED	JEI GOLD PLATED	GOLD PLATED	SPECIAL GOLD PLATED	HIGH NUMBER of MATINGS (HNM)	mm	mm²	AWG		mm	mm
CDMS 0,3	CDMA 0,3	CDMJD 0,3	CDMD 0,3	CDM2D 0,3	RDM2D 0,3	0,80	0,14-0,37	26-22	1	8	8
CDMS 0,5	CDMA 0,5	CDMJD 0,5	CDMD 0,5	CDM2D 0,5	RDM2D 0,5	1,10	0,5	20	2		
CDMS 0,7	CDMA 0,7	CDMJD 0,7	CDMD 0,7	CDM2D 0,7	RDM2D 0,7	1,30	0,75	18	2		
CDMS 1,0	CDMA 1,0	CDMJD 1,0	CDMD 1,0	CDM2D 1,0	RDM2D 1,0	1,45	1	18	3		
CDMS 1,5	CDMA 1,5	CDMJD 1,5	CDMD 1,5	CDM2D 1,5	RDM2D 1,5	1,6	1,5	16	4		
CDMS 2,5	CDMA 2,5	CDMJD 2,5	CDMD 2,5	CDM2D 2,5	RDM2D 2,5	2,2	2,5	14	5	6	6

Specificaties

General characteristics

Connection type	Turned crimp
Contact type (gender)	Male
Min. Cross section	0.14 mm²
Max. Cross section	0.37 mm²
AWG size	26 - 22
Identification	1
Diameter male contact	1.6 mm
Wire strip length	8 mm

Electrical parameters

Max. rated current	10 A

Material

Material contact	Brass
Plating of contact	Gold