Product data sheet

ILME connectoren

female contact, 0,08-0,21mm², stampt, crimp, 5A, for 500 cycle of connector

SIF1D 0.2
https://www.ac-solutions.be/nl/product/sif1d02

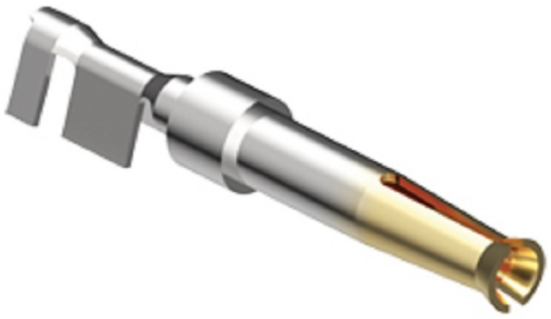

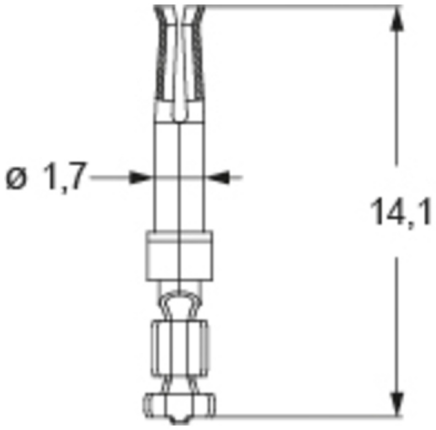



Specificaties

General characteristics

Connection type	Stamped crimp
Contact type (gender)	Female
Min. Cross section	0.08 mm²
Max. Cross section	0.21 mm²
AWG size	28 - 24
Diameter male contact	1 mm

Electrical parameters

Max. rated current	5 A

Material

Material contact	Brass (leadfree)
Plating of contact	Partial gold