Product data sheet

ILME connectoren

male contact, 0,08-0,21mm², stampt, crimp, 5A, for 250 cycle of connector, on reel

SIM2D 0.2R
https://www.ac-solutions.be/nl/product/sim2d02r

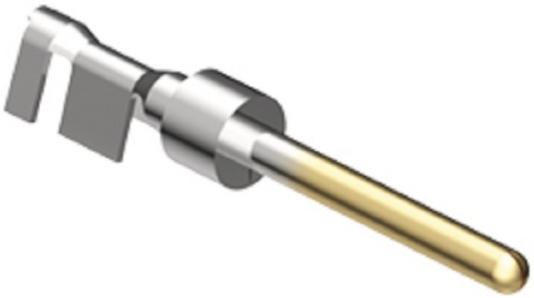

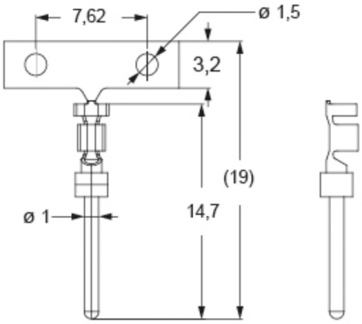

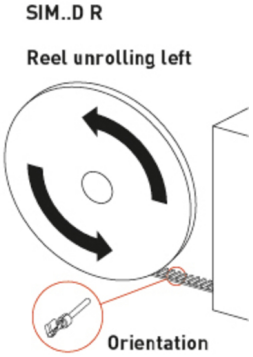

Specificaties

General characteristics

Connection type	Stamped crimp
Contact type (gender)	Male
Min. Cross section	0.08 mm²
Max. Cross section	0.21 mm²
AWG size	28 - 24
Diameter male contact	1 mm

Electrical parameters

Max. rated current	5 A

Material

Material contact	Brass (leadfree)
Plating of contact	Partial gold