Product data sheet

ILME connectoren

male contact, 0,21-0,52mm², stampt, crimp, 5A, for 50 cycle of connector, on coil

SIM3D 0.5C
https://www.ac-solutions.be/nl/product/sim3d05c

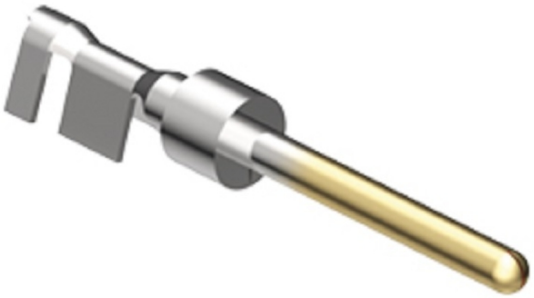

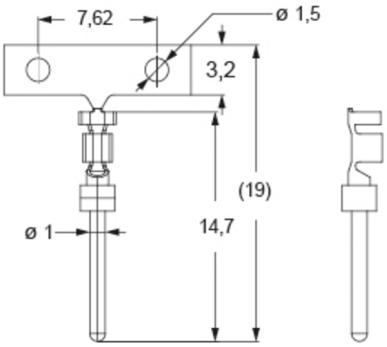

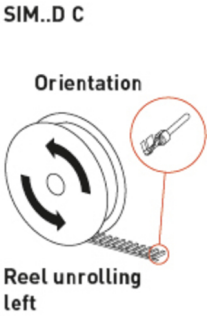

Specificaties

General characteristics

Connection type	Stamped crimp
Contact type (gender)	Male
Min. Cross section	0.21 mm²
Max. Cross section	0.52 mm²
AWG size	24 - 20
Diameter male contact	1 mm

Electrical parameters

Max. rated current	5 A

Material

Material contact	Brass (leadfree)
Plating of contact	Partial gold