Product data sheet

ILME connectoren

surface mounting housing, high, size 57.27, T-TYPE H plastic, 2 levers, 1xM25 side

TAPH 10.25
https://www.ac-solutions.be/nl/product/taph1025



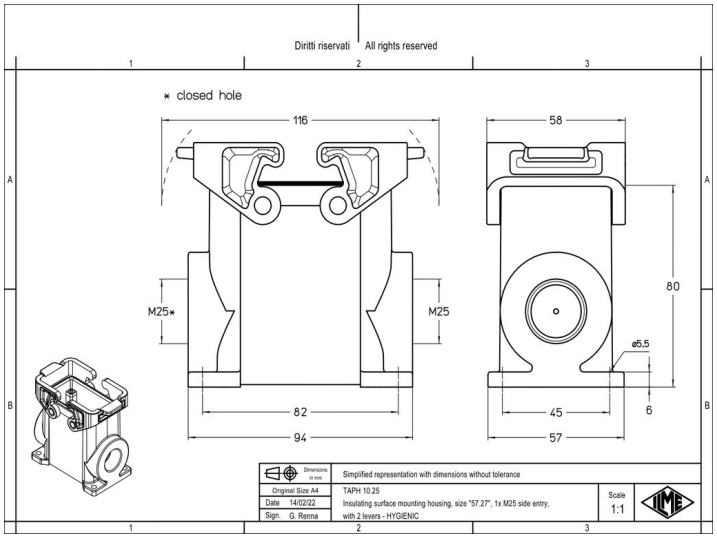

Specificaties

General characteristics

Enclosure type	Surface mounting housing
Size	57.27
Enclosure series	T-TYPE /H
Closing type	With 2 levers
Locking mechanism	Double locking levers
Protection degree	IP66 / IP69
Ambient lower temperature	-40 °C
Ambient upper temperature	70 °C
Operation lower temperature	-40 °C
Operation upper temperature	70 °C
Cable entry type	side cable entry
Cable entry size	M25
Position cable feed	Two-sided
Height	80 mm
Width	57 mm
Length	94 mm

Material

Product data sheet

ILME connectoren

surface mounting housing, high, size 57.27, T-TYPE H plastic, 2 levers, 1xM25 side

Material housing	Thermoplastic
Coating housing	Uncoated
Inflammability class of insulation material acc. with UL94	V0
Extra information	Corrosion resistant,UV resistant,With interlocking device