Product data sheet

Higo connectoren - Mini B

Mini B Male cable connector

Z509BG P 00 C8 1000
https://www.ac-solutions.be/nl/product/z509bgp00c81000



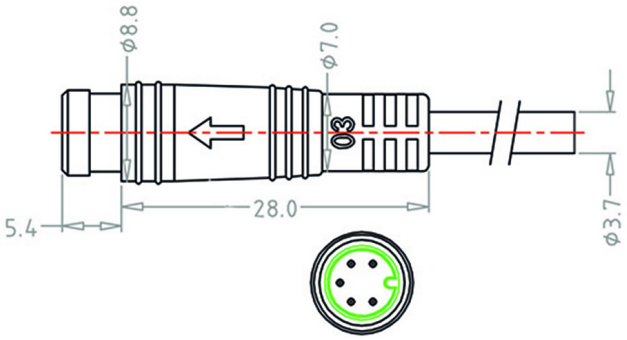

Specificaties

General Characteristics

Number of contacts	5
Connector shape	Plug
Gender	Male
Color	Green
Upper temperature	80 °C
Lower temperature	-25 °C
Protection degree	IP66
Mating cycles (times)	200 Times
Connector diameter	9 mm
Fitting length	62 mm
Cable Length	1000 mm
Cable diameter	4.1 mm
Wire section	0.2 mm²
Remark	Other cable length/type on request

Product data sheet

Higo connectoren - Mini B

Mini B Male cable connector

Electrical Parameters

Rated current	2 A
Rated voltage	48 V AC / 60 V DC
Max. insulation resistance (M?)	?20 M?
Max. contact resistance (M?)	?10 m?

Material

Material jacket	TPU
Insulation wire	PTFE
Material of contact	Copper Alloy
Contact plating	Gold over Nickel